THE PROPERTY OF SILVERADO CERTIFIED ENERGY EQUIPMENT AND IS NOT TO BE USED FOR ANY PURPOSE OTHER THAN FOR WHICH IT IS INTENDED

GENERAL NOTES:
1. ALL DIMENSIONS ARE IN INCHES UNLESS OTHERWISE NOTED.
2. ALL WELDS TO BE 1/4" FILLET UNLESS OTHERWISE NOTED.
3. GRIND ALL SHARP EDGES.
4. FINAL INSPECTION REQUIRED.

BILL OF MATERIALS

ITEM	QTY	DESCRIPTION	MATERIAL	PART NO	PURCHASE ORDER NO
1	1	18" STD SMLS PIPE X 41 1/2" LG	SA-106B	STPI18-STD	
2	1	18" STD SMLS PIPE X 211" LG	SA-106B	STPI18-STD	
3	1	18" STD SMLS PIPE X 222" LG	SA-106B	STPI18-STD	
4	2	1/8" X 21 1/2" OD PLATE	SA-36	10000270	
5	1	3/8" X 62 1/4" OD PLATE	SA-36	10000272	
6	1	1" NPT 3M FULL CPLG	SA-105N	CP1-3M	

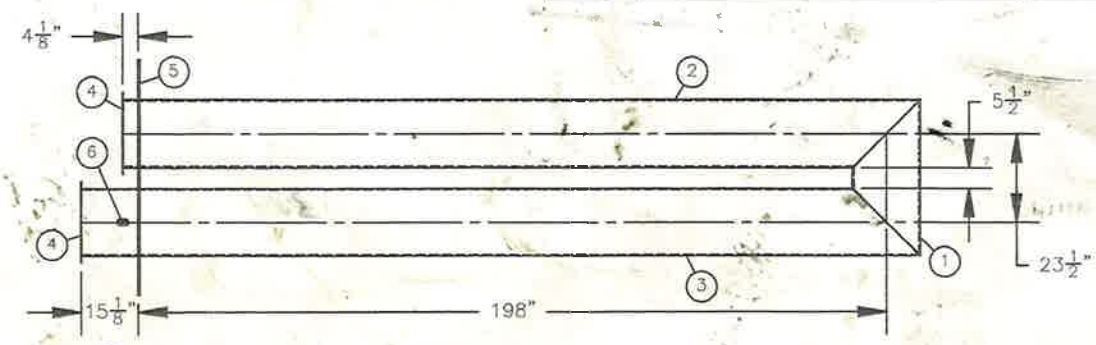

TOP VIEW

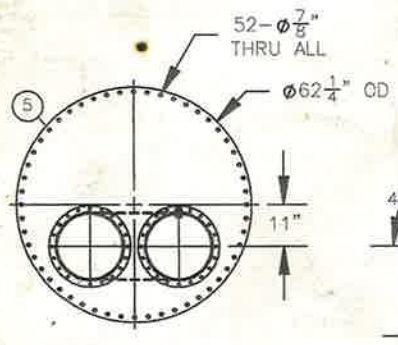

SIDE VIEW

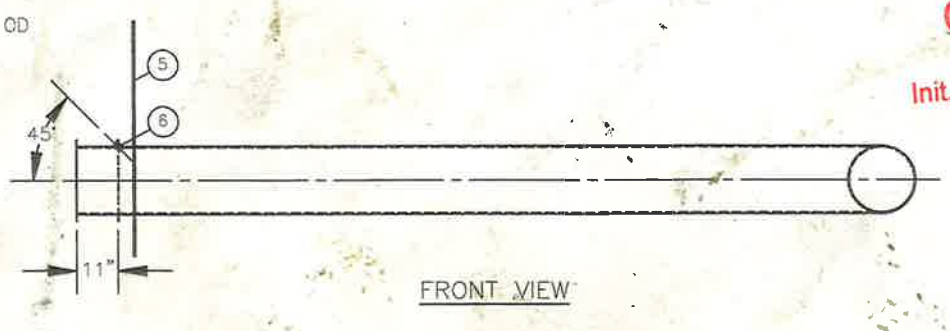

FRONT VIEW

ISSUED FOR CONSTRUCTION
Init. JP Date 8 Feb 07

	DJG	01.24.07
	DWN BY	DATE

SILVERADO
Certified Energy Equipment

18" OD FIRETUBE ASSEMBLY

	BY	DATE
DWN	DJG	01.19.07
CHK	JP	02/02/07
ENG APP		
QC APP		8 Feb 7/07

Customer: CANADIAN FOREST OIL
Work Order No: 1801
DWG NO: 984E07-FT
REV 0
SHT 1/1

THIS DRAWING IS THE PROPERTY OF SILVERADO CERTIFIED ENERGY EQUIPMENT AND IS NOT TO BE USED FOR ANY PURPOSE OTHER THAN FOR WHICH IT IS INTENDED

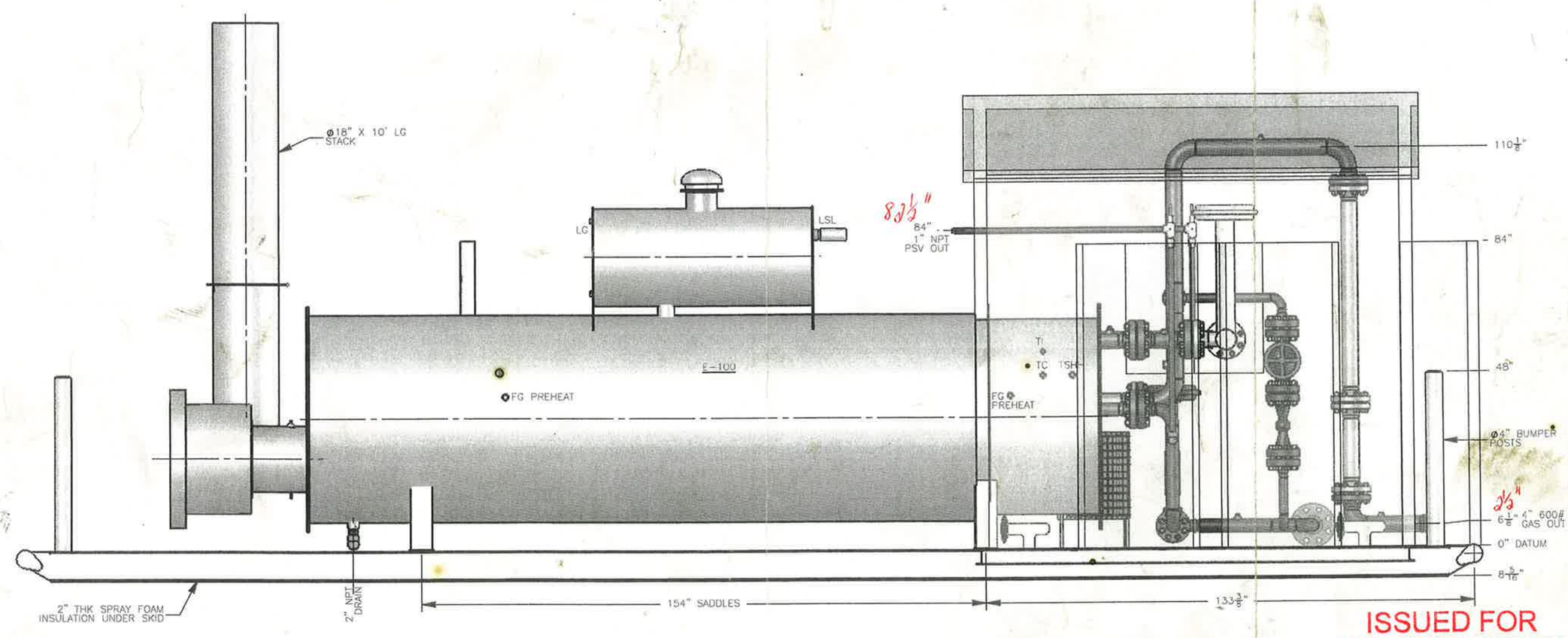

ELEVATION VIEW 'A-A'

ISSUED FOR CONSTRUCTION

Init. _____ Date Mar 2/07

SILVERADO
Certified Energy Equipment

	BY	DATE
DWN	DJG	01.18.07
CHK		02/02/07
ENG APP		
QC APP		FEB 0 5 2007

54" OD X 18'-0" LG LINEHEATER GENERAL ARRANGEMENT

Customer: CANADIAN FOREST OIL

Work Order No: 1801

DWG NO: 984B07

REV 0

SHT 2/3

THIS DRAWING IS THE PROPERTY OF SILVERADO CERTIFIED ENERGY EQUIPMENT AND IS NOT TO BE USED FOR ANY PURPOSE OTHER THAN FOR WHICH IT IS INTENDED

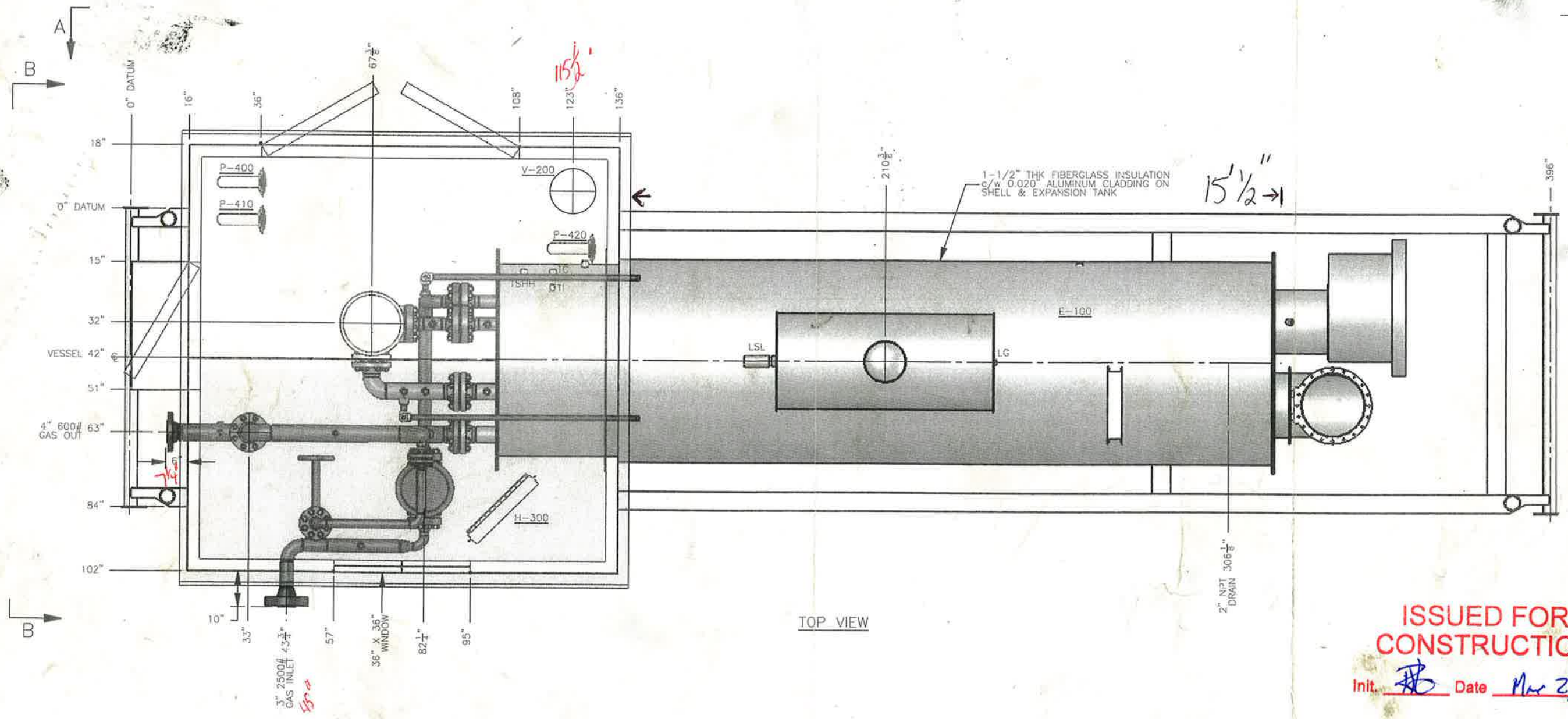

ISSUED FOR CONSTRUCTION

Init. RB Date Mar 2/07

REV	DESCRIPTION	DWN BY	DATE
0	ISSUED FOR CONSTRUCTION	DJG	01.24.07

REVISIONS

SILVERADO Certified Energy Equipment

	BY	DATE
DWN	DJG	01.18.07
CHK		02/02/07
ENG APP		
QC APP		FEB 05 2007

54" OD X 18'-0" LG LINEHEATER GENERAL ARRANGEMENT

Customer: CANADIAN FOREST OIL

Work Order No: 1801

DWG NO: [redacted]4B07

REV 0 SHT 1/3

THIS DRAWING IS THE PROPERTY OF SILVERADO CERTIFIED ENERGY EQUIPMENT AND IS NOT TO BE USED FOR ANY PURPOSE OTHER THAN FOR WHICH IT IS INTENDED

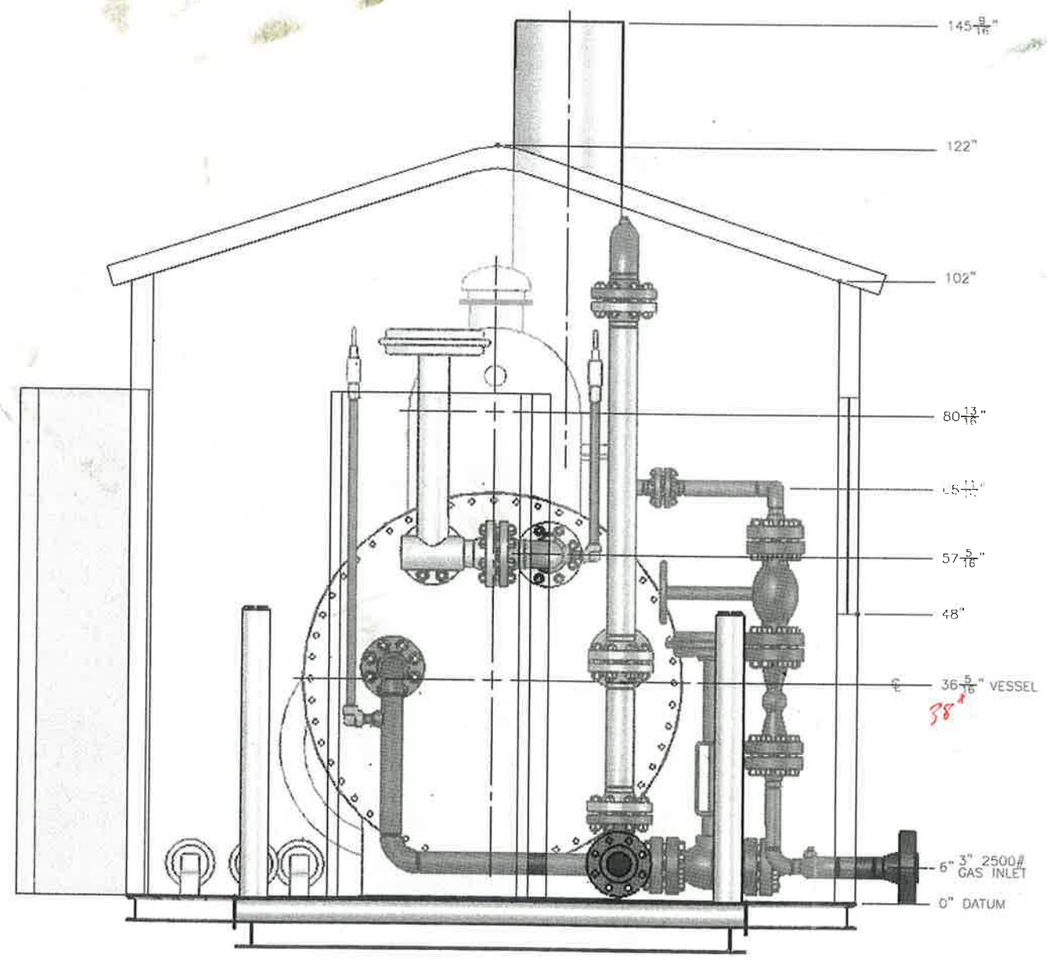

ELEVATION VIEW 'B–B'

BILL OF MATERIALS

ITEM	QTY	DESCRIPTION	MATERIAL	PART NO
1	1	1/8" X 11 3/4" OD BAU GASKET	–	–
2	2	1/8" X 21 1/2" OD BAU GASKET	–	–
3	2	1/8" X 62 1/4" OD X 53 1/2" ID BAU GASKET	–	–
4	8	5/8" X 4 1/4" STUDS	SA–193–B7	B7ST0.625X4.25
5	40	7/8" X 5 3/4" STUDS	SA–193–B7	B7ST0.875X5.75
6	24	1 1/8" X 6 3/4" STUDS	SA–193–B7	B7ST1.125X6.75
7	40	1" X 6 3/4" STUDS	SA–193–B7	B7ST1X6.75
8	5	2" 2500# R–26 GASKET	304SS	GAS–R26
9	3	3" 1500# R–35 GASKET	304SS	GAS–R35
10	1	2" 600# FLEX GASKET	304SS	GAS2–3/4/600304
11	5	4" 600# FLEX GASKET	304SS	GAS4–600304
12	1	8" JAYCO, 16oz PRESSURE, 4oz VACUUM THIEF HATCH	–	I–JTH8
13	16	5/8" NUT	SA–194–2H	NUT.625–2H
14	80	7/8" NUT	SA–194–2H	NUT.875–2H
15	80	1" NUT	SA–194–2H	NUT1–2H
16	48	1 1/8" NUT	SA–194–2H	NUT1.125–2H

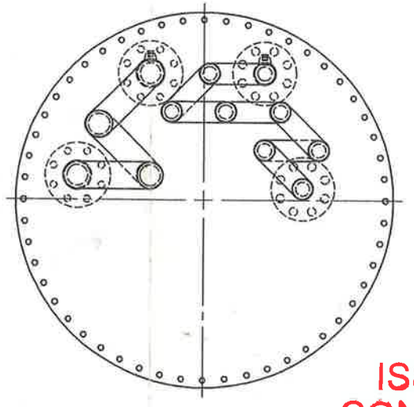

COIL LAYOUT

ISSUED FOR CONSTRUCTION

Init. JB Date Mar 2/07

SILVERADO
Certified Energy Equipment

54" OD X 18'-0" LG LINEHEATER GENERAL ARRANGEMENT

	BY	DATE
DWN	DJG	01.18.07
CHK	B	02/02/07
ENG APP		
QC APP		

FEB 0 5 2007

Customer: CANADIAN FOREST OIL

Work Order No: 1807

DWG NO: 984B07

REV 0 SHT 3/3

COILS DESIGN DATA:

- 2500# RTJ SCH XXH, INDIRECT PREHEAT COIL
  MAWP: 3375 PSIG @ 200°F, 8-PASS
  S/N: S-2356/0886 P9407.213, A/_____
- 4" 600# RF SCH 160, INDIRECT REHEAT COIL
  MAWP: 1350 PSIG @ 200°F, 4-PASS
  S/N: S-2363 CRN: P9417.213, A/_____

E-100 LINEHEATER

SIZE: 54" OD X 18'-0" LG
RATING: 1.5 MMBTU/HR
MFG: SILVERADO OILFIELD VENTURES LTD.
LINEHEATER S/N: S-2235

V-200 FUEL GAS SCRUBBER

SIZE: 12 3/4" OD X 3'-0" S/S
MAWP: 720 PSIG @ 100°F
MFG: SILVERADO OILFIELD VENTURES LTD.
S/N: _____
CRN: T0849.213

H-300

MODEL: CATADYNE
SIZE: 24" X 24"
MFG: CIS-CAN
EXPLOSION PROOF
VENTHOOD

P-400 INJECTION PUMP

MAX. DISCHARGE PRESS.: 1500 PSI
MAX. SUPPLY PRESS.: 35 PSI
MODEL #: 5100 SERIES
MFG: CVS CONTROLS LTD.
c/w 3/8" PLUNGER
S/N: _____

P-410 INJECTION PUMP

MAX. DISCHARGE PRESS.: 5000 PSI
MAX. SUPPLY PRESS.: 35 PSI
MODEL #: 5000 SERIES
MFG: TEXSTEAM
c/w 1/2" PLUNGER
S/N: _____

P-420 INJECTION PUMP

MAX. DISCHARGE PRESS.: 1500 PSI
MAX. SUPPLY PRESS.: 35 PSI
MODEL #: 5000 SERIES
MFG: TEXSTEAM
c/w 1/2" PLUNGER
S/N: _____

GENERAL NOTES:

1. COILS ARE NOT SHOWN FOR CLARITY
2. ALL INSTRUMENTS ARE SUITABLE FOR SWEET SERVICE.
3. FUEL GAS PIPING: 1" S/80 THD, SA-106B w/ 2000# FITTINGS.
4. INSTRUMENTATION: 3/8" 304S.S. WELDED TUBING w/ C.S. SWAGELOK FITTINGS.
5. 1 1/2" THK FIBERGLASS INSULATION c/w ALUMINUM CLADDING ON HEATER AND EXPANSION TANK SHELLS.
6. BURNER SYSTEM ARE B149.3 COMPATIBLE.
7. 2" THK SPRAY FOAM INSULATION UNDER SKID.

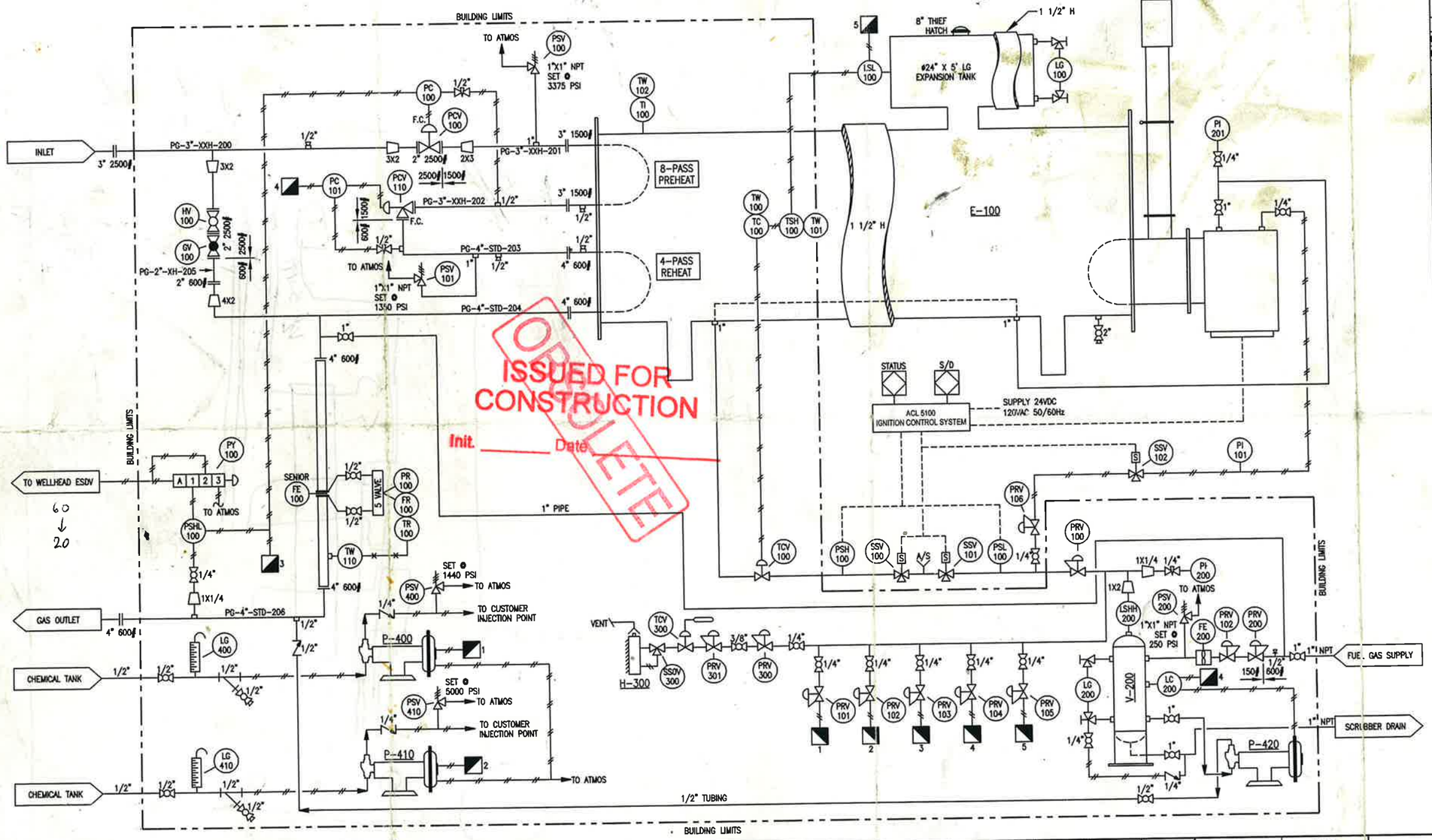

BILL OF MATERIALS

ITEM	QTY	DESCRIPTION	POS
V-200	1	12-3/4" OD X 3' S/S, 720 PSIG FUEL GAS SCRUBBER c/w HEED (SXH-200)	
H-300	1	CATADYNE HEATER, 24" x 24" c/w VENTHOOD, EXPLOSION PROOF, 12V WIRE TO CLASS I DIV II	
P-400	1	CVS 5100 SERIES INJECTION PUMP c/w 3/8" PLUNGERS	
P-410/420	2	TEXSTEAM 5000 SERIES INJECTION PUMP c/w 1/2" PLUNGER	
FE-100	1	4" 600# RF SR METER RUN, SWEET, 2000 EDITION, 85" LG	
FE-200	1	ROOTS GAS METER 1500#	
FR/PR/TR-100	1	BARTON 3 PEN CHART RECORDER, 100" WC X 2500# STATIC X 150°F, BATTERY OPERATED CLOCK, 5 VALVE S.S. MANIFOLD	
LC-200	1	NORRISEAL EVS, 2" NPT, BACK MOUNT, SNAP ACTING, PVC DISPLACER	
LG-100/200	2	RED LINE SITE GLASS c/w (2) VALVES	
LG-400/410	2	DANIEL DRUM GAUGE, TRANSPARENT, 48" VISIBLE	
LSL-100	1	SOR ES-1530 ELECTRIC SHUTDOWN CONTROLLER, 2" NPT	
PC-100	1	FISHER 4150, REVERSE ACTING, 0-3000 PSI BOURDON TUBE	
PC-101	1	FISHER 4150, REVERSE ACTING, 0-1500 PSI BOURDON TUBE	
PI-101	1	0-30 PSI, 1/4" NPT, 2 1/2" DIAL, 4" FACE, DUAL SCALE, BTM MOUNT, LIQ. FILLED	
PI-200/201	2	0-300 PSI, 1/4" NPT, 2 1/2" DIAL, 4" FACE, DUAL SCALE, BTM MOUNT, LIQ. FILLED	
PCV-100	1	2" 2500# RTJ FISHER 'D' BODY c/w FISHER 667 SIZE 45 ACTUATOR	
PCV-110	1	WILLIS ANGLE CHOKE 3" 1500# RTJ INLET X 4" 600# RF, CERAMIC TRIM, STYLE C c/w FISHER 656-60 ACTUATOR, 6-30 PSI SIGNAL, F.C.	
PSH-100	1	HIGH PRESSURE SWITCH, SET AT 50 PSI	
PSL-100	1	LOW PRESSURE SWITCH, SET AT 3 PSI	
PSHL-100	1	FISHER 4660 PRESSURE PILOT, SET AT _____ PSI LOW/_____PSI HIGH	
PRV-100/101	2	FISHER 627, 1" NPT, 35-80 PSI RANGE, 1500 PSI BODY, NACE	
PRV-102	1	FISHER 627, 1" NPT, 120-550 PSI RANGE, 1500 PSI BODY, NACE	
PRV-101-105	6	FISHER 67CFR, 1/4" NPT, 0-60 PSI RANGE, SWEET	
PRV-200	1	FISHER 630, 1" NPT, 550-1440 PSI RANGE, 1500 PSI BODY, NACE	
PRV-300	1	FISHER 912 LOW PRESSURE REGULATOR (c/w HEATER)	
PRV-301	1	MAXITROL APPLIANCE REGULATOR (c/w HEATER)	
PSV-100	1	TAYLOR 8200, 1" NPT, 'E' ORIFICE, SET @ 3375 PSIG	
PSV-101	1	TAYLOR 8200, 1" NPT, 'E' ORIFICE, SET @ 1350 PSIG	
PSV-200	1	TAYLOR 8200, 1" NPT, 'E' ORIFICE, SET @ 250 PSIG	
PSV-400	1	NUPRO PUMP RELIEF VALVE, 1/4" NPT, SET @ 1440 PSIG	
PSV-410	1	NUPRO PUMP RELIEF VALVE, 1/4" NPT, SET @ 5000 PSIG	
PY-100	1	AMOT 4057-CP PRESSURE SWITCH, MANUAL LATCHING	
SOV-102	1	ASCO 3 WAY 24V SOLENOID VALVE, MODEL#: EF8320G200-24	
SSOV-300	1	100% SAFETY SHUT-OFF VALVE, 3/8" NPT c/w THERMOCOUPLE (c/w HEATER)	
SSV-100	1	CCS-6900-GZE HIGH PRESSURE SHUTOFF SOLENOID VALVE	
SSV-101	1	CCS-6900-GZE LOW PRESSURE SHUTOFF SOLENOID VALVE	
TC-100	1	KIMRAY HT-12, 3/4" NPT	
TCV-100	1	KIMRAY 112-SMT, 1" MNPT, AIR TO OPEN/F.C.	
TCV-300	1	TEMPERATURE CONTROL VALVE, 0 TO 44°C c/w CAPILLIARY	
TI-100	1	0-250°F, 3" FACE, 3/4" NPT, 12" STEM, DUAL SCALE, BACK MOUNT	
TSH-100	1	KIMRAY T-12M, 3/4" NPT	
TW-100-102	3	3/4" NPT X 1/2" NPT X 12" LG THERMOWELL, 304SS	
TW-110	1	3/4" NPT X 1/2" NPT X 2" LG THERMOWELL, 304SS	
	1	ZIRCO ACL 5100 BURNER SYSTEM, 24V	
	1	ZIRCO 30/18-18A(2) BURNER, LEFT HAND OFFSET, NO BOLT PATTERN	
HV-100	1	2" 2500# RTJ BALL VALVE, S.S. TRIM	
GV-100	1	2" 2500# RTJ MANUAL GLOBE VALVE, S.S. TRIM	
	11	1/4" NPT 2000# BAR STOCK BALL VALVE, S.S. TRIM	
	2	3/8" NPT MANUAL SHUT-OFF BALL VALVE (c/w HEATER)	
	7	1/2" NPT 2000# BAR STOCK BALL VALVE, S.S. TRIM	
	5	1" NPT 2000# BAR STOCK BALL VALVE, S.S. TRIM	
	1	2" NPT 2000# BAR STOCK BALL VALVE, S.S. TRIM	
	3	1/4" NPT INLINE CHECK VALVE, S.S. TRIM	
	1	1/4" NPT 6000# MXF NEEDLE VALVE, S.S. TRIM	
	1	1/2" NPT INLINE CHECK VALVE, S.S. TRIM	
	2	1/2" NPT 6000# MXF NEEDLE VALVE, S.S. TRIM	
	2	1/2" NPT Y-STRAINERS	
	1	10' X 10' X 8'-6" HIGH GABLE SELF FRAMER BUILDING c/w 22 GAUGE GALVANIZED EXTERIOR. R-12 FIBERGLASS INSULATION IN WALLS & ROOF c/w 4 MIL VAPOR BARRIER, 24 GAUGE FLUTED ALUMINUM INTERIOR	
	3	(1) 3' X 7' SINGLE & (1) DOUBLE INSULATED DOOR c/w IWG WINDOW, PANIC HARDWARE, CHECK CHAIN, AND WEATHER STRIPPING	
	2	12" X 12" LOUVERED VENTS c/w SLIDE AND SCREEN	
	1	38" X 36" DOUBLE GLAZED SLIDING WINDOW c/w SCREEN	

XXX-XXX-XXX-XXX-XXX
- LINE SCHEDULE
- LINE SIZE
- LINE CLASS
- LINE NUMBER
- LINE SERVICE

LINE DESIGNATION

DESCRIPTION	DRAWING NO.

REFERENCE DRAWINGS

REV	DESCRIPTION	DATE	DWN	CHK	APP
0	ISSUED FOR CONSTRUCTION	01.24.07	DJG		

REVISIONS

	BY	DATE
DWN	DJG	12.20.06
CHK		01/02/07
APP		FEB 0 5 2007

THIS DRAWING IS THE PROPERTY OF SILVERADO OILFIELD VENTURES LTD. AND IS NOT TO BE USED FOR ANY PURPOSE OTHER THAN FOR WHICH IT IS INTENDED

SILVERADO
Certified Energy Equipment
P.O. Box-265
Red Deer, Alberta T4N 5E8
Ph: (403) 340-1900
Fax: (403) 341-6162

54" OD X 18'-0" LG
1.5 MMBTU/HR LINEHEATER
P & ID (SWEET)

CUSTOMER: CANADIAN FOREST OIL LTD.

Work Order No:	REV	DWG NO.	SHT
1801	0	9[illegible]A06	1/1

COILS DESIGN DATA:

- 3" 1500# RTJ SCH XXH, INDIRECT PREHEAT COIL
  MAWP: 3375 PSIG @ 200°F, 8-PASS
  S/N: S-2355A, CRN: P9407.213, AI#_____
- 4" 600# RF SCH 160, INDIRECT REHEAT COIL
  MAWP: 1350 PSIG @ 200°F, 4-PASS
  S/N: S-2355B, CRN: P9417.213, AI#_____

E-100 LINEHEATER

SIZE: 54" OD X 18'-0" LG
RATING: 1.5 MMBTU/HR
MFG: SILVERADO OILFIELD VENTURES LTD.
LINEHEATER S/N: S-2355

V-200 FUEL GAS SCRUBBER

SIZE: 12 3/4" OD X 3'-0" S/S
MAWP: 720 PSIG @ 100°F
MFG: SILVERADO OILFIELD VENTURES LTD.
S/N: _____
CRN: T0P49.213

H-300

MODEL: CATADYNE
SIZE: 24" X 24"
MFG: CIS-CAN
EXPLOSION PROOF VENTHOOD

P-400 INJECTION PUMP

MAX. DISCHARGE PRESS.: 1500 PSI
MAX. SUPPLY PRESS.: 35 PSI
MODEL #: 5100 SERIES
MFG: CVS CONTROLS LTD.
c/w 3/8" PLUNGER
S/N: _____

P-410 INJECTION PUMP

MAX. DISCHARGE PRESS.: 5000 PSI
MAX. SUPPLY PRESS.: 35 PSI
MODEL #: 5000 SERIES
MFG: TEXSTEAM
c/w 1/2" PLUNGER
S/N: _____

P-420 INJECTION PUMP

MAX. DISCHARGE PRESS.: 1500 PSI
MAX. SUPPLY PRESS.: 35 PSI
MODEL #: 5000 SERIES
MFG: TEXSTEAM
c/w 1/2" PLUNGER
S/N: _____

GENERAL NOTES:

1. COILS ARE NOT SHOWN FOR CLARITY
2. ALL INSTRUMENTS ARE SUITABLE FOR SWEET SERVICE.
3. FUEL GAS PIPING: 1" S/80 THD, SA-106B w/ 2000# FITTINGS.
4. INSTRUMENTATION: 3/8" 304S.S. WELDED TUBING w/ C.S. SWAGELOK FITTINGS.
5. 1 1/2" THK FIBERGLASS INSULATION c/w ALUMINUM CLADDING ON HEATER AND EXPANSION TANK SHELLS.
6. BURNER SYSTEM ARE B149.3 COMPATIBLE.
7. 2" THK SPRAY FOAM INSULATION UNDER SKID.

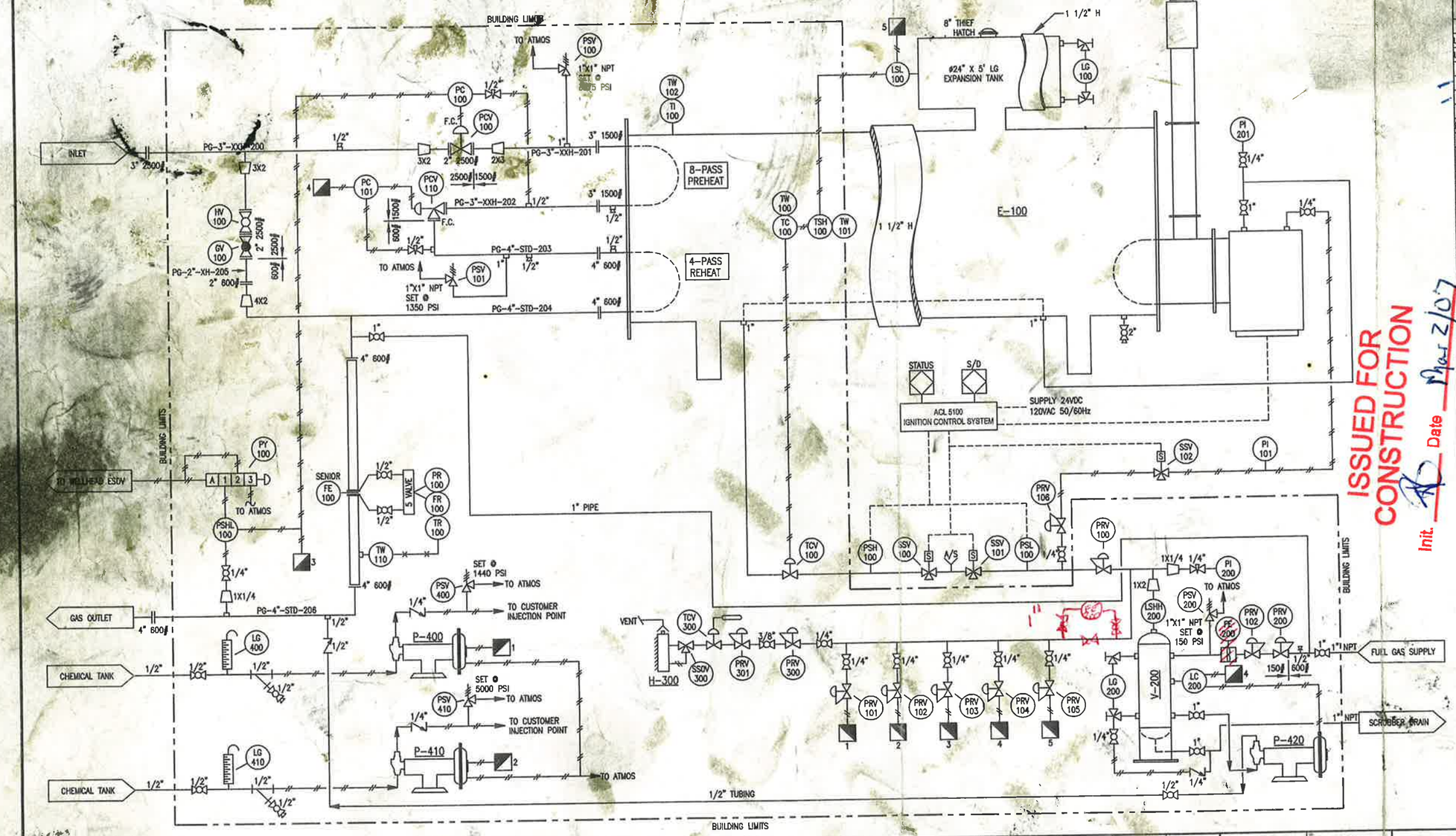

BILL OF MATERIALS

ITEM	QTY	DESCRIPTION	PO#
V-200	1	12-3/4" OD X 3' S/S, 720 PSIG FUEL GAS SCRUBBER c/w HLSD (LSHH-200)	
H-300	1	CATADYNE HEATER, 24" x 24" c/w VENTHOOD, EXPLOSION PROOF, 12V WIRE TO CLASS I DIV II	
P-400	1	CVS 5100 SERIES INJECTION PUMP c/w 3/8" PLUNGERS	
P-410/420	2	TEXSTEAM 5000 SERIES INJECTION PUMP c/w 1/2" PLUNGER	
FE-100	1	4" 600# RF SR METER RUN, SWEET, 2000 EDITION, 85" LG	
FE-200	1	ROOTS GAS METER	
FR/PR/TR-100	1	BARTON 3 PEN CHART RECORDER, 100" WC X 2500# STATIC X 150°F, BATTERY OPERATED CLOCK, 5 VALVE S.S. MANIFOLD	
LC-200	1	NORRISEAL EVS, 2" NPT, BACK MOUNT, SNAP ACTING, PVC DISPLACER	
LG-100/200	2	RED LINE SITE GLASS c/w (2) VALVES	
LG-400/410	2	DANIEL DRUM GAUGE, TRANSPARENT, 48" VISIBLE	
LSL-100	1	ACCUTROL PNEUMATIC SHUTDOWN CONTROLLER, 2" NPT	
PC-100	1	FISHER 4150, REVERSE ACTING, 0-3000 PSI BOURDON TUBE	
PC-101	1	FISHER 4150, REVERSE ACTING, 0-1500 PSI BOURDON TUBE	
PI-101	1	0-30 PSI, 1/4" NPT, 2 1/2" DIAL, 4" FACE, DUAL SCALE, BTM MOUNT, LIQ. FILLED	
PI-200/201	2	0-300 PSI, 1/4" NPT, 2 1/2" DIAL, 4" FACE, DUAL SCALE, BTM MOUNT, LIQ. FILLED	
PCV-100	1	2" 2500# RTJ FISHER 'D' BODY c/w FISHER 667 SIZE 45 ACTUATOR	
PCV-110	1	WILLIS ANGLE CHOKE 3" 1500# RTJ INLET X 4" 600# RF, CERAMIC TRIM, STYLE C c/w FISHER 656-60 ACTUATOR, 6-30 PSI SIGNAL, F.C.	
PSH-100	1	HIGH PRESSURE SWITCH, SET AT 50 PSI	
PSL-100	1	LOW PRESSURE SWITCH, SET AT 3 PSI	
PSHL-100	1	FISHER 4660 PRESSURE PILOT, SET AT _____ PSI LOW/_____PSI HIGH	
PRV-100/101	2	FISHER 627, 1" NPT, 35-80 PSI RANGE, 1500 PSI BODY, NACE	
PRV-102	1	FISHER 627, 1" NPT, 120-550 PSI RANGE, 1500 PSI BODY, 1/4" ORIFICE, NACE	
PRV-101-105	6	FISHER 67CFR, 1/4" NPT, 0-60 PSI RANGE, SWEET	
PRV-200	1	FISHER 630, 1" NPT, 550-1440 PSI RANGE, 1500 PSI BODY, 1/8" ORIFICE, NACE	
PRV-300	1	FISHER 912 LOW PRESSURE REGULATOR (c/w HEATER)	
PRV-301	1	MAXITROL APPLIANCE REGULATOR (c/w HEATER)	
PSV-100	1	TAYLOR 8200, 1" NPT, 'D' ORIFICE, SET @ 3375 PSIG	
PSV-101	1	TAYLOR 8200, 1" NPT, 'E' ORIFICE, SET @ 1350 PSIG	
PSV-200	1	TAYLOR 8200, 1" NPT, 'E' ORIFICE, SET @ 150 PSIG	
PSV-400	1	NUPRO PUMP RELIEF VALVE, 1/4" NPT, SET @ 1440 PSIG	
PSV-410	1	NUPRO PUMP RELIEF VALVE, 1/4" NPT, SET @ 5000 PSIG	
PY-100	1	AMOT 4057-CP PRESSURE SWITCH, MANUAL LATCHING	
SOV-102	1	ASCO 3 WAY 24V SOLENOID VALVE, MODEL#: EF83200200-24	
SSOV-300	1	100% SAFETY SHUT-OFF VALVE, 3/8" NPT c/w THERMOCOUPLE (c/w HEATER)	
SSV-100	1	CCS-6900-GZE HIGH PRESSURE SHUTOFF SOLENOID VALVE	
SSV-101	1	CCS-6900-GZE LOW PRESSURE SHUTOFF SOLENOID VALVE	
TC-100	1	KIMRAY HT-12, 3/4" NPT	
TCV-100	1	KIMRAY 112-SMT, 1" MNPT, AIR TO OPEN/F.C.	
TCV-300	1	TEMPERATURE CONTROL VALVE, 0 TO 44°C c/w CAPILLARY	
TI-100	1	0-250°F, 3" FACE, 3/4" NPT, 12" STEM, DUAL SCALE, BACK MOUNT	
TSH-100	1	KIMRAY T-12M, 3/4" NPT	
TW-100-102	3	3/4" NPT X 1/2" NPT X 12" LG THERMOWELL, 304SS	
TW-110	1	3/4" NPT X 1/2" NPT X 2" LG THERMOWELL, 304SS	
	1	ZIRCO ACL 5100 BURNER SYSTEM, 24V	
	1	ZIRCO 30/18-18A(2) BURNER, LEFT HAND OFFSET, NO BOLT PATTERN	
HV-100	1	2" 2500# RTJ BALL VALVE, S.S. TRIM	
GV-100	1	2" 2500# RTJ MANUAL GLOBE VALVE, S.S. TRIM	
	11	1/4" NPT 2000# BAR STOCK BALL VALVE, S.S. TRIM	
	2	3/8" NPT MANUAL SHUT-OFF BALL VALVE (c/w HEATER)	
	7	1/2" NPT 2000# BAR STOCK BALL VALVE, S.S. TRIM	
	5	1" NPT 2000# BAR STOCK BALL VALVE, S.S. TRIM	
	1	2" NPT 2000# BAR STOCK BALL VALVE, S.S. TRIM	
	3	1/4" NPT INLINE CHECK VALVE, S.S. TRIM	
	1	1/4" NPT 6000# MXF NEEDLE VALVE, S.S. TRIM	
	1	1/2" NPT INLINE CHECK VALVE, S.S. TRIM	
	2	1/2" NPT 6000# MXF NEEDLE VALVE, S.S. TRIM	
	2	1/2" NPT Y-STRAINERS	
	1	10' X 10' X 8'-6" HIGH GABLE SELF FRAMER BUILDING c/w 22 GAUGE GALVANIZED EXTERIOR, R-12 FIBERGLASS INSULATION IN WALLS & ROOF c/w 4 MIL VAPOR BARRIER, 24 GAUGE FLUTED ALUMINUM INTERIOR	
	3	(1) 3' X 7' SINGLE & (1) DOUBLE INSULATED DOOR c/w IWG WINDOW, PANIC HARDWARE, CHECK CHAIN, AND WEATHER STRIPPING	
	2	12" X 12" LOUVERED VENTS c/w SLIDE AND SCREEN	
	1	36" X 36" DOUBLE GLAZED SLIDING WINDOW c/w SCREEN	

ISSUED FOR CONSTRUCTION
Date Mar 2/07
Init.

XXX-XXX-XXX-XXX-XXX
- LINE SCHEDULE
- LINE SIZE
- LINE CLASS
- LINE NUMBER
- LINE SERVICE

LINE DESIGNATION

DESCRIPTION	DRAWING NO.

REFERENCE DRAWINGS

REV	DESCRIPTION	DATE	DWN	CHK	APP
0	ISSUED FOR CONSTRUCTION	01.24.07	DJG		

REVISIONS

	BY	DATE
DWN	DJG	12.20.06
CHK		02/08/07
APP		

THIS DRAWING IS THE PROPERTY OF SILVERADO OILFIELD VENTURES LTD. AND IS NOT TO BE USED FOR ANY PURPOSE OTHER THAN FOR WHICH IT IS INTENDED

SILVERADO
Certified Energy Equipment
P.O. Box 265
Red Deer, Alberta T4N 5E8
Ph: (403) 340-1900
Fax: (403) 341-6162

54" OD X 18'-0" LG
1.5 MMBTU/HR LINEHEATER
P & ID (SWEET)

CUSTOMER: CANADIAN FOREST OIL LTD.

Work Order No:	REV	DWG NO	SHT
1801	1	984A07	1/1

THIS DRAWING IS THE PROPERTY OF SILVERADO CERTIFIED ENERGY EQUIPMENT AND IS NOT TO BE USED FOR ANY PURPOSE OTHER THAN FOR WHICH IT IS INTENDED

GENERAL NOTES:
1. ALL DIMENSIONS ARE IN INCHES UNLESS OTHERWISE NOTED.
2. ALL WELDS TO BE 1/4" FILLET UNLESS OTHERWISE NOTED.
3. GRIND ALL SHARP EDGES.
4. FINAL INSPECTION REQUIRED.

BILL OF MATERIALS

ITEM	QTY	DESCRIPTION	MATERIAL	PART NO	PURCHASE ORDER NO
1	1	1/8" X 21 1/2" OD PLATE	SA-36	10000270	
2	2	1/8" X 21 1/2" OD X 21 3/4" LG PLATE	SA-36	10000271	
3	1	18 S/10 SMLS PIPE X 59" LG	SA-53B/ERW	STPI18-S10	
4	1	18" S/10 SMLS PIPE X 21" LG	SA-53B/ERW	STPI18-S10	
5	1	18" S/10 SMLS PIPE X 72" LG	SA-53B/ERW	STPI18-S10	
6	2	ACKLANDS TORPEDO WELD ON HINGE	SA-36	MARFSP100GF	

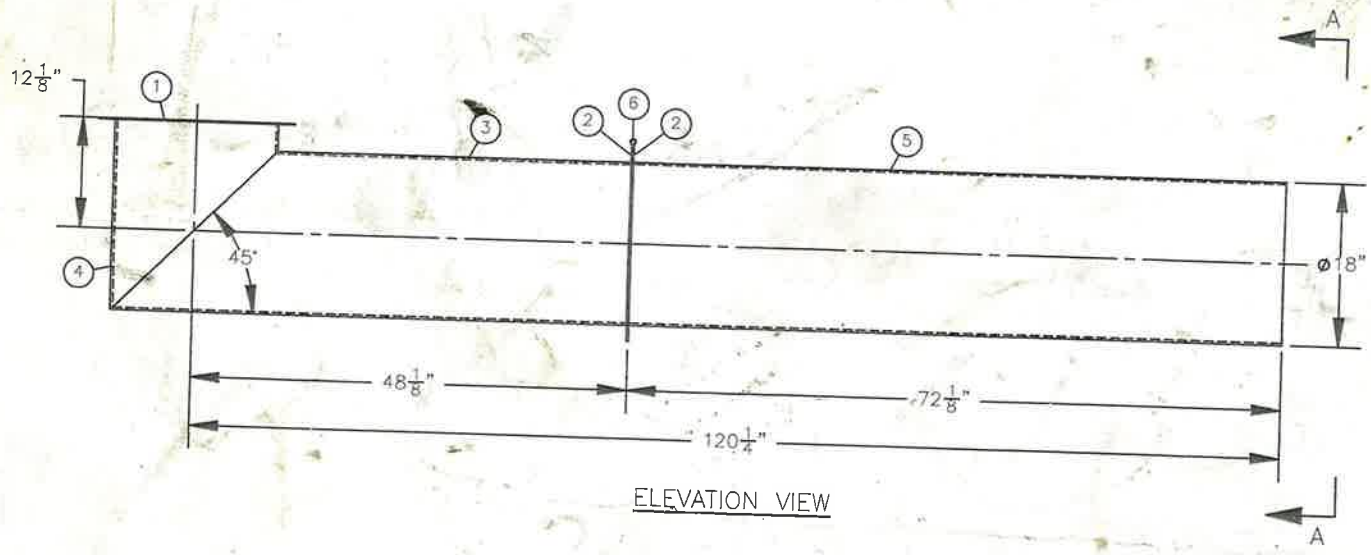

ELEVATION VIEW

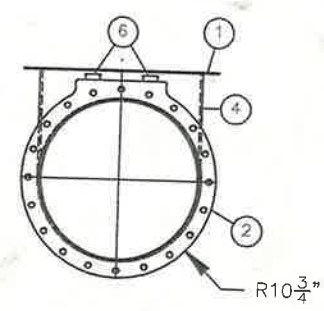

PLAN VIEW 'A-A'

ISSUED FOR CONSTRUCTION
Init. JK Date FEB 0 7 2007

REV	DESCRIPTION	DWN BY	DATE
0	ISSUED FOR CONSTRUCTION	DJG	01.24.07

REVISIONS

SILVERADO Certified Energy Equipment

	BY	DATE
DWN	DJG	01.19.07
CHK		02/07/07
ENG APP		
QC APP		FEB 0 7 2007

18" OD X 10' LG STACK ASSEMBLY

Customer: CANADIAN FOREST OIL

Work Order No: 1801

DWG NO: 984E07-ST

REV 0

SHT 1/1

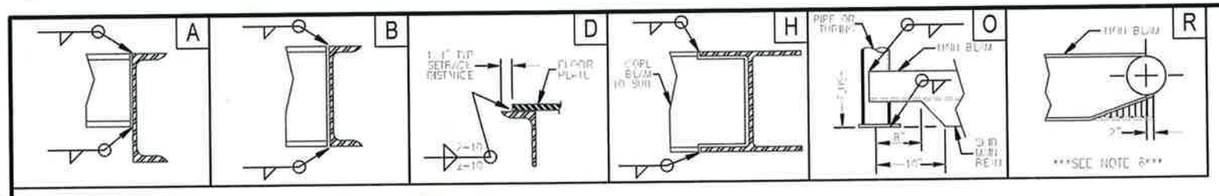

BILL OF MATERIALS

ITEM	QTY.	DESCRIPTION	CUT LENGTH	MATERIAL	PART NO
1	1	W8 X 18# WIDE FLANGE	396"	44W	STW8X18
2	4	W8 X 18# WIDE FLANGE	78 1/2"	44W	STW8X18
3	1	W8 X 18# WIDE FLANGE	396"	44W	STW8X18
4	4	PIPE, SCH XXH, 4" DIA.	48"	SA-106B	PI4A106XXH
5	2	PIPE, SCH 40, 3" DIA.	84"	SA-53B/ERW	STPI3-STD
6	8	L 2" X 2" X 1/4"	18 15/16"	44W	STA.25X2X2
7	4	L 2" X 2" X 1/4"	78 1/2"	44W	
8	3	L 2" X 2" X 1/4"	18 1/2"	44W	STA.25X2X2
9	4	C4" X 5.4# CHANNEL	20 1/2"	44W	STC4X5.4
10	2	C4" X 5.4# CHANNEL	120"	44W	STC4X5.4
13	1	3/16" X 5' X 10' CHECKER PLATE		SA-36	STCHK.188X60X120
14	1	3/16" X 5' X 10' CHECKER PLATE		SA-36	STCHK.188X60X120
11	1	3/16" X 16" X 36" CHECKER PLATE		44W	
12	4	3/16" THK X 5" X 7 1/2" LG PLATE	3/16"	SA-36	10000031
15	4	3/16" THK X 3 1/2" OD PLATE		SA-36	10000078

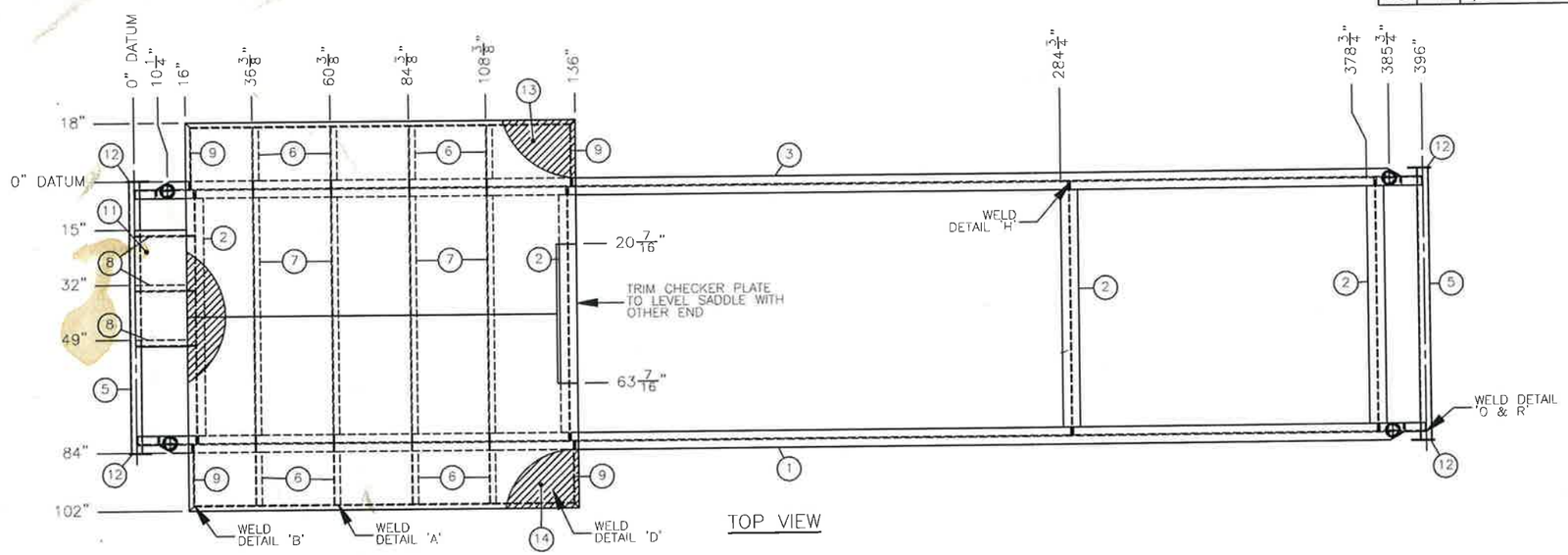

TOP VIEW

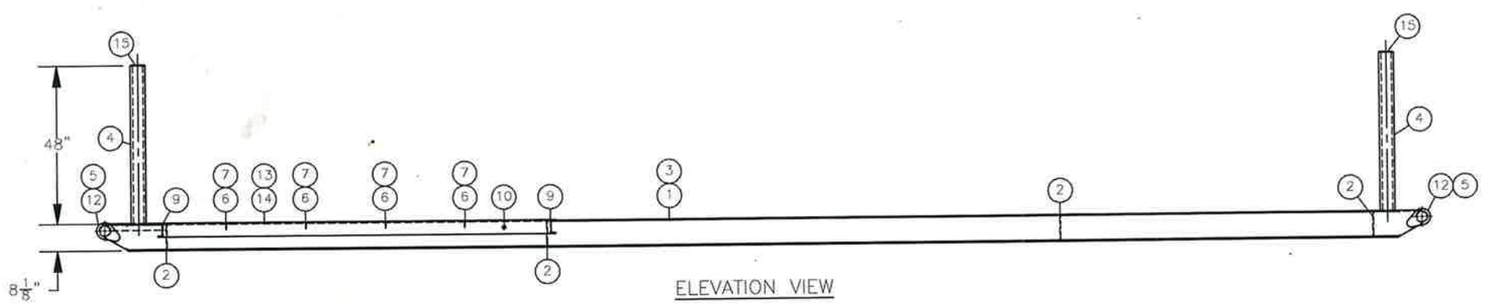

ELEVATION VIEW

GENERAL NOTES:
1. ALL DIMENSIONS ARE IN INCHES UNLESS OTHERWISE NOTED.
2. ALL WELDS TO BE 1/4" FILLET UNLESS OTHERWISE NOTED.
3. SANDBLAST & PAINT ENAMEL SILVERADO GREY.
4. GRIND ALL SHARP EDGES.
5. FINAL INSPECTION REQUIRED.
6. CUT BOTTOM FLANGE AT THE ENDS 2" LONGER THAN THE TOP FLANGE (SEE WELD DETAIL 'R').

ISSUED FOR CONSTRUCTION
Init. JK Date FEB 0 5 2007

REV	DESCRIPTION	DWN BY	DATE
A	ISSUED FOR APPROVAL	DJG	01.19.07

REVISIONS

SILVERADO Certified Energy Equipment

	BY	DATE
DWN	DJG	01.05.07
CHK		01/04/07
ENG APP		
QC APP		FEB 0 5 2007

7' X 33' STRUCTURAL SKID IN 10' X 10' BUILDING LINEHEATER PACKAGE

Customer: **CANADIAN FOREST OIL**

Work Order No: 1801

DWG NO: **984D07**

REV: A

SHT: 1/1

THIS DRAWING IS THE PROPERTY OF SILVERADO CERTIFIED ENERGY EQUIPMENT AND IS NOT TO BE USED FOR ANY PURPOSE OTHER THAN FOR WHICH IT IS INTENDED

THIS DRAWING IS THE PROPERTY OF SILVERADO CERTIFIED ENERGY EQUIPMENT AND IS NOT TO BE USED FOR ANY PURPOSE OTHER THAN FOR WHICH IT IS INTENDED

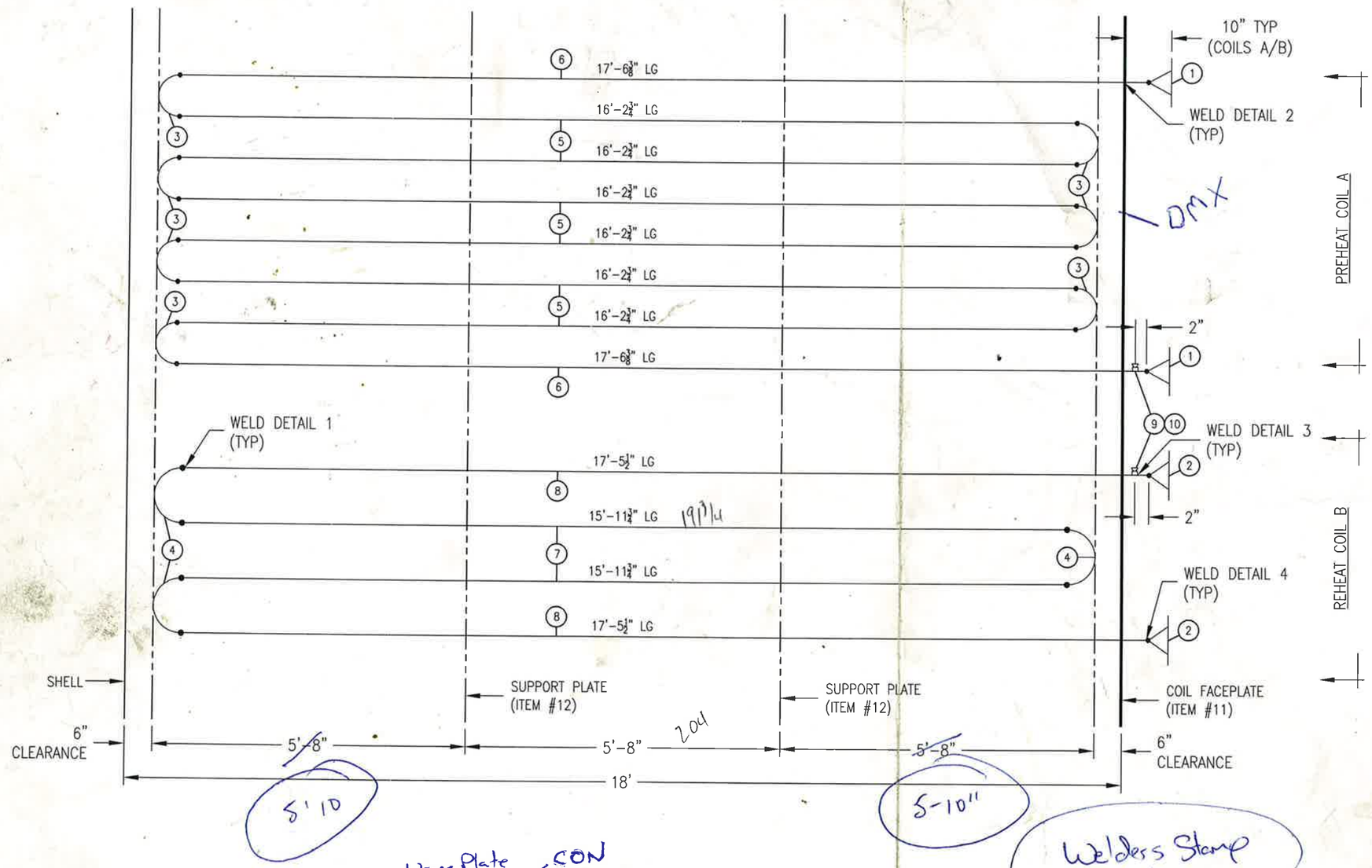

GENERAL NOTES:

1. ALL DIMENSIONS ARE IN FEET & INCHES.
2. ALL PIPE LENGTHS & OVERALL DIMENSIONS INCLUDE THE WELD GAPS.

BILL OF MATERIALS

	QTY	DESCRIPTION	MATERIAL	PART NO	HEAT NO.
	2	3" 1500# XXH RTJWN FLG	SA-350-LF2	FL3-1500RTJWNXXH-LT	DPG
2	2	4" 600# S/160 RFWN FLG	SA-105N	FL4-600RFWNS160	DPF/DPI
3	7	3" XXH 180° LR RETURN WELD ELL	SA-420-WPL6	WEL3XXH-180LR-LT	DOT
4	3	4" S/160 180° LR RETURN WELD ELL	SA-234-WPB	WEL4S160-180LR	DTN
5	6	3" XXH SMLS PIPE X 16'-2-3/4" LG	SA-333-GR6	PI2A333XXH	DPE
6	2	3" XXH SMLS PIPE X 17'-6-3/8" LG	SA-333-GR6	PI2A333XXH	DPE
7	2	4" S/160 SMLS PIPE X 15'-11-3/4" LG	SA-106B	PI4A106S160	DPD
8	2	4" S/160 SMLS PIPE X 17'-5-1/2" LG	SA-106B	PI4A106S160	DPD
9	2	1/2" 6000# THREDOLET	SA-105N	TOL.5-6M	CON
10	2	1/2" 6000# HEX HEAD PLUG	SA-105N	TPL.5	
11	1	3/8" X 62-1/4" OD PLATE	SA-36	10000296	DMX
12	2	1/4" X 52-1/2" OD X 27-1/4" LG PLATE	SA-36	10000297	DQC

Nameplate CON/CKJ

ISSUED FOR CONSTRUCTION
Init. Date Jan 31/07
~~ISSUED FOR CONSTRUCTION~~

COIL DESIGN DATA

CONSTRUCTION AS PER:	ASME B31.3, 2004 EDITION		
QUALITY CONTROL PROGRAM:	AQP-1376		
WELDING PROCEDURE REGISTRATION NO.:	WP-2265.2		
VOLUME:	3.94 ft^3	HEATING SURFACE:	147 ft^2
APPROX. WEIGHT (EMPTY):	3500 lbs		
SERVICE:	NORMAL FLUID	YEAR BUILT:	2007
COIL A (3" 1500# RTJWN PRE-HEAT LINE)			
SERIAL NUMBER:	S-2356A	CRN:	P-9407.213
MAWP:	3375 PSIG	C/A:	1/16"
HYDROTEST:	5063 PSIG	PREHEAT:	50°F
MDMT:	-20°F	DESIGN TEMP:	200°F
IMPACT TEST:	EXEMPT PER TABLE 323.2.2 COLUMN A		
RADIOGRAPHY:	RANDOM (M341.4b) 20% OF TOTAL WELDS		
PWHT:	NOT REQUIRED		
COIL B (4" 600# RFWN RE-HEAT LINE)			
SERIAL NUMBER:	S-2356B	CRN:	P-9417.213
MAWP:	1350 PSIG	C/A:	1/16"
HYDROTEST:	2025 PSIG	PREHEAT:	50°F
MDMT:	-20°F	DESIGN TEMP:	200°F
IMPACT TEST:	EXEMPT PER TABLE 323.2.2 COLUMN A		
RADIOGRAPHY:	RANDOM (M341.4b) 20% OF TOTAL WELDS		
PWHT:	NOT REQUIRED		

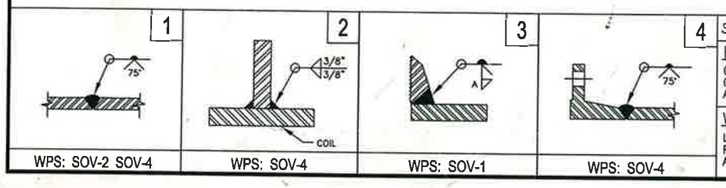

STANDARD TOLERANCES

FABRICATION:
GENERAL DEVIATION: ±1/8"
OVERALL LENGTH: ±1/4"
ANGULAR: ±1°

WELD PREPARATION:
LAND (ROOT FACE): 1/16" ±1/32"
ROOT GAP: ±1/8" ±1/16"
ANGULAR: ±5°

DESCRIPTION	DRAWING NO.
3" COILS REG'D DSN	BDD-300A (R.2)
4" COILS REG'D DSN	BDD-400A (R.1)

REFERENCE DRAWINGS

REV	DESCRIPTION	DATE	DWN	CHK	APP
0	ISSUED FOR CONSTRUCTION	01.24.07	DJG		

REVISIONS

SILVERADO
Certified Energy Equipment
P.O. Box 265
Red Deer, Alberta T4N 5E8
Ph: (403) 340-1900
Fax: (403) 341-6162

54" OD X 18' LG LINEHEATER COILS
12-PASS SPLIT 8/4

Customer: CANADIAN FOREST OIL

Work Order No.	REV	DWG NO.	PAGE
1801	0	984C07-CO	1/1